# Banner Stands (Large Format)

1. Screw three-section poles onto bases (fig. A).
2. Screw crossbar flats together to form 2 crossbar assemblies (BN-5 only) (fig. B).
3. Slide graphics over crossbars (fig. C).
4. Secure top and bottom crossbars to uprights using knobs provided and secure optional crosssbar at desired height (fig. D).
5. Raise telescopic tube uprights until the graphic is taut, then lock.

## Applicable Products:

BN-4, BN-5, BN-6

(A)

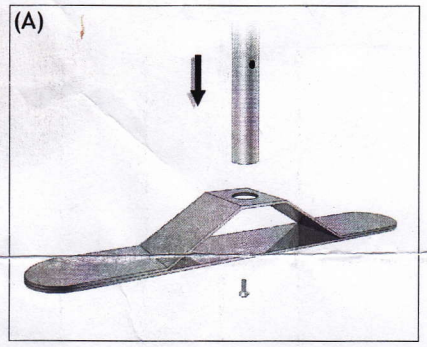

(B)

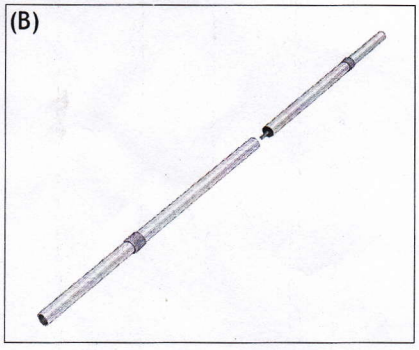

(C)

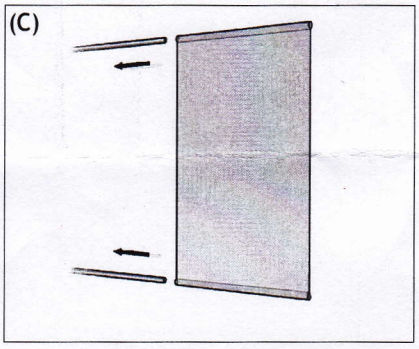
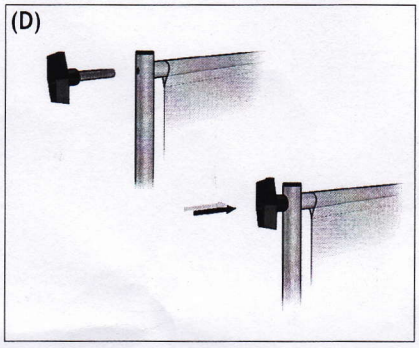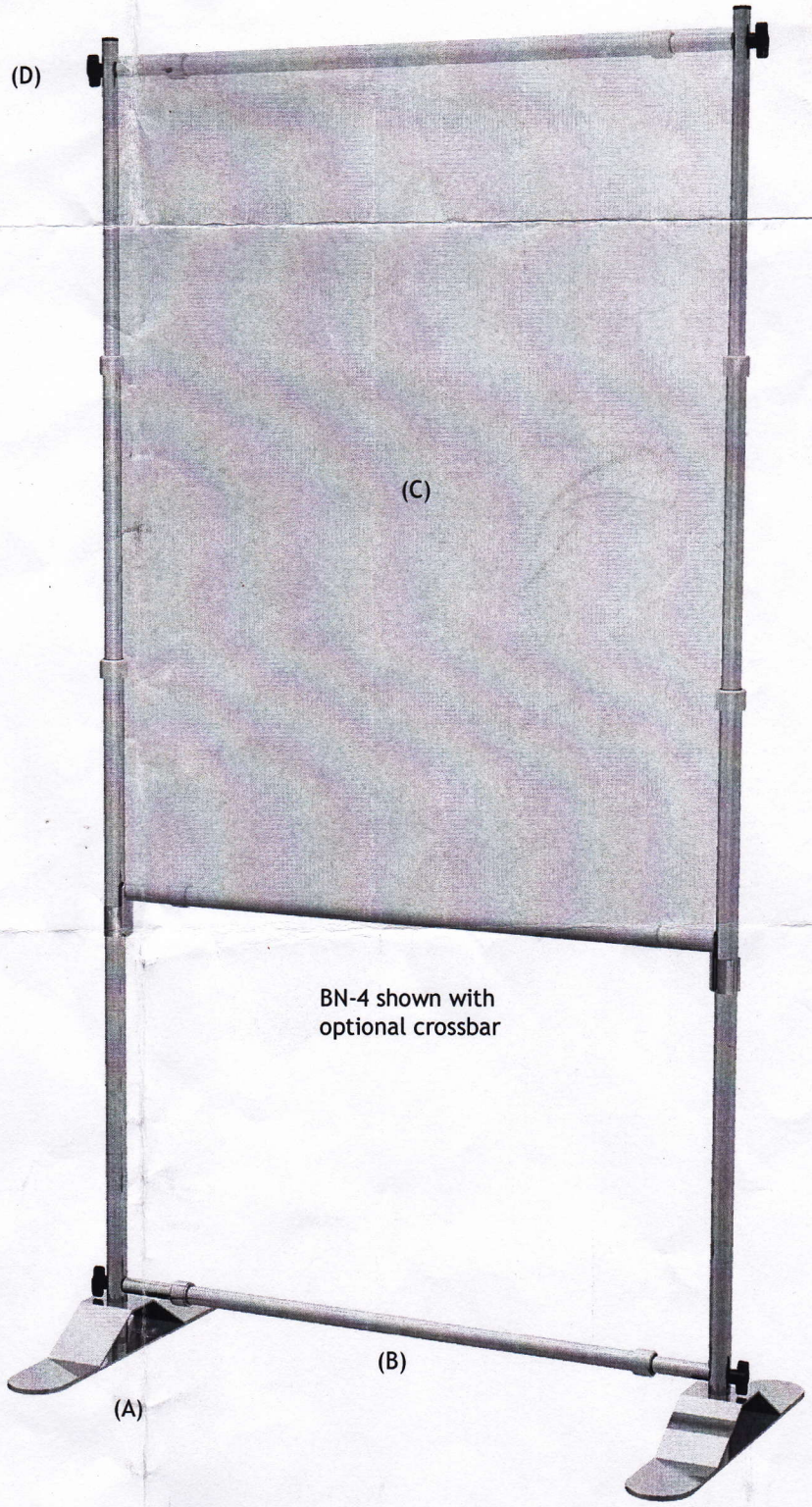
(D)